APPLIED WIRELESS©

Long Range Wireless Applications

RCRC-3R Series

303, 433 MHz
3-Function Remote Control Receiver (with On-Board 10-Amp Relays)

The RCRC-3R Series remote control receivers are designed to provide a quick and cost effective solution for a variety of wireless applications. The receiver includes an external antenna, decoder and three 10-Amp on-board relays. The receiver offers excellent sensitivity and selectivity by the utilization of SAW technology and state-of-the-art low noise amplifiers. An external jack is provided for external long-range antenna. Units are designed to work with Applied Wireless encoders, as in the KTX-C series models. This is a learning receiver, and can learn up to 4 different coded transmitters.

Features

- Matching Transmitters Available
- Three 10-Amp SPDT On-Board Relays
- Long Range – Up to 600 ft[1]
- Integrated Code-Learning Decoder
- Can Learn up to 4 Transmitter IDs
- 16.7+ Million Unique Transmitter IDs
- Momentary, Latched, or Toggle Operation
- 12-24 Volt DC or AC Operation, 24VAC for AC1 Model
- LED Output Activation Indicators

Typical Applications

- Remote Control
- Industrial ON/OFF Applications
- Motor Control
- Solenoid Control
- Lighting Control
- Access Control
- PLC Activation

Block Diagram

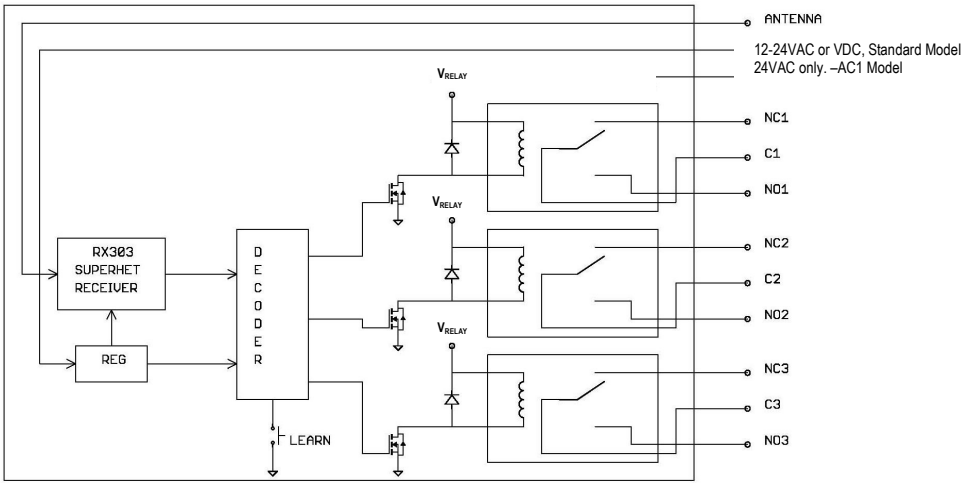

[1]Unobstructed line of sight range, when used with DP series dipole antenna. With the included whip antenna, range is 300-400 ft. Optional antennas are available for longer range. See Antenna Options table.

Ordering Information

Frequency (MHz)	*Model Number (Standard)*	*Model Number (High Transient Suppression)*	*Matching Transmitter[2]*
303.825	RCR303C-3R	RCR303C3R-AC1	KTX303Cx
433.920	RCR433C-3R	RCR433C3R-AC1	KTX433Cx

[2]x=Number of buttons: 1, 2, or 3 or other dash options.

Electrical Characteristics

Sym	Parameter	Min	Typ	Max	Unit
V	Operating Voltage Range	10	12-24	30	VAC or VDC
V_{-AC1}	-AC1 Model Operating Voltage Range		24	30	VAC
I_u	Operating Current, Unactivated		20	24	mA
I_{MAX}	Operating Current, Activated		58	63	mA
	Relay Contact Ratings at 28VDC			10	Amps
	Relay Contact Ratings at 120VAC, Resistive Load			12	Amps
	Receiver Sensitivity		-112		dBm
f_c	Center Frequency		See Chart		MHz
Z_{out}	Antenna Input Impedance		50		Ohms
T_{op}	Operating Temperature	-20		+60	C

Package Dimensions

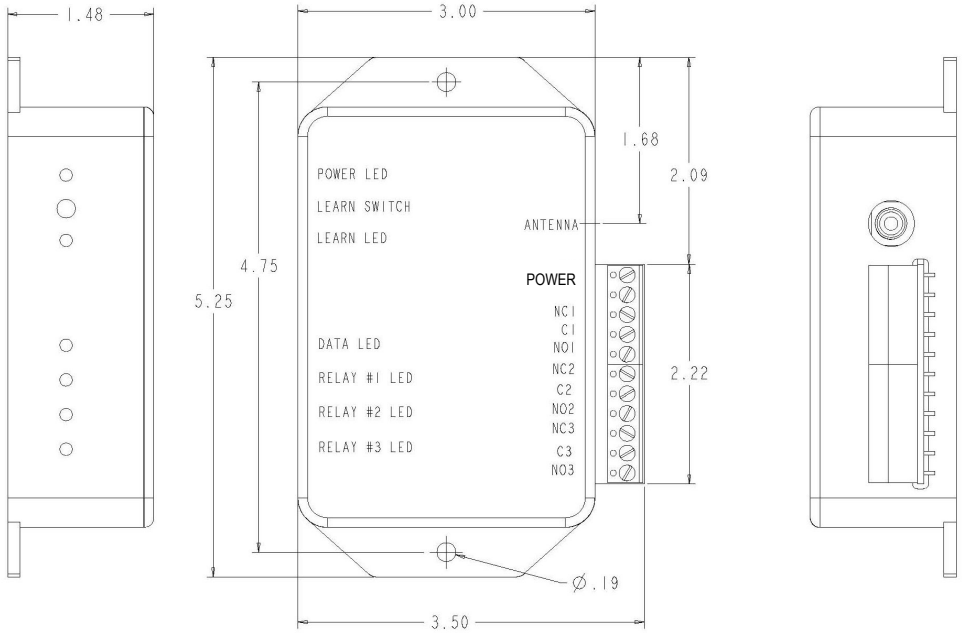

Learn Mode Instructions

The receiver will learn up to 4 transmitter IDs. To learn a transmitter, power up the receiver, remove the receiver antenna, and then press the learn button. The Learn LED will light. Then press any button on the keyfob transmitter. When the LED goes out, the transmitter has been learned. To learn another transmitter, repeat the process. When the fifth transmitter is learned, the first transmitter that was learned is eliminated from flash memory. If many transmitters will be used with a single receiver, ask factory for a "house code". Then there is no limit on the amount of transmitters used with a receiver.

Application Circuit – DC Motor Forward/Reverse Circuit

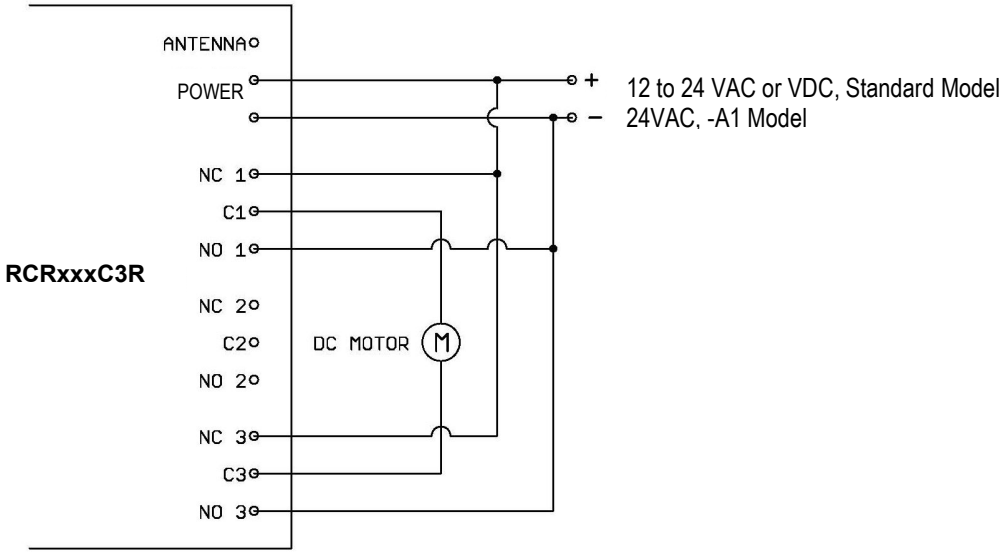

ANTENNA OPTIONS

Model	Description	Gain (dBd)	Notes
800014/800015	¼-Wave Whip	-2	Included
DPxxx	Dipole	0	With 7' cable

xxx=303 or 433

Application Note: The number of buttons on the KTX transmitter determines which relay in the RCRC-3R receiver responds to each button, as illustrated below:

Transmitter Type	Transmitter Button Number	Corresponding Relay in RCRC-3R Receiver
Single Button KTX	**1**	Relay **#2**
Two-Button KTX	**1**	Relay **#1**
	2	Relay **#3**
Three-Button KTX	**1**	Relay **#1**
	2	Relay **#2**
	3	Relay **#3**

Output Response Mode Selection Jumpers

RCRC3R remote control receiver may be configured for three different output response modes: Momentary Mode (factory-default), Latched Mode, or Toggle Mode (sometimes called “Push On / Push Off” Mode). The configuration selected applies to all three of the receiver’s on-board relays. This section describes the characteristics of, and configuration settings for, the three Output Response Modes.

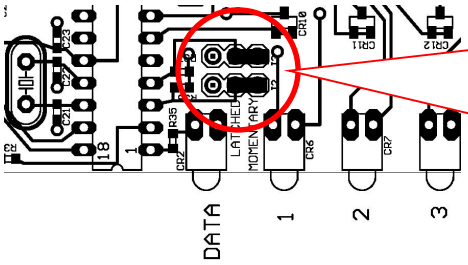

These two jumpers establish the response characteristics of the receiver’s relays, as described in the sections below. To select a response mode other than Momentary (factory-default), remove the receiver’s top cover and configure the jumpers as required.

NOTE: This drawing depicts the relevant section of the PC board for model RCRxxxC-3R, with the two jumpers shown in the factory-default (Momentary Mode) configuration.

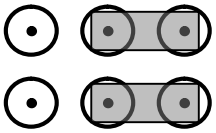

Momentary Mode (factory default)

A relay energizes when its associated button on the remote is depressed. The relay remains energized only until the transmitter’s button is released (or reception of the remote’s signal ceases).

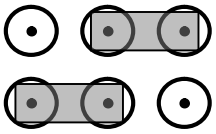

Latched Mode

A relay energizes when its associated button on the remote is depressed, and remains energized after the button is released. When a different button on the remote is pressed, the currently energized relay will de-activate, and the relay corresponding to the button just pressed will energize. In this mode, only one relay can be active at any given time.

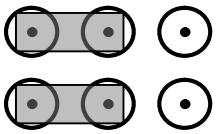

Toggle Mode

A relay energizes when its associated button on the remote is depressed, and remains energized after the button is released. A subsequent press of the same button on the remote will deactivate the relay. In this mode, each of the relays is completely independent of the others, thus any combination of one, two, three, or no relays may be energized at any given time.